MAGNETRON JP9-75

QUICK REFERENCE DATA

Forced-air cooled fixed frequency 'X' band pulsed magnetron

Frequency	9.375 Gc/s
Power output (pulsed)	80 kW
Construction	Packaged

Unless otherwise shown, data are applicable to both types.

This data should be read in conjunction with GENERAL OPERATIONAL RECOMMENDATIONS – MICROWAVE DEVICES which precede this section of the handbook.

CHARACTERISTICS

	Min.		*Max.*	
Frequency				
Fixed within the band	9.345	to	9.405	Gc/s
Pulse voltage (I_{pulse} = 15A)	14		16	kV
R.F. pulse output power (I_{pulse} = 15A)	65		—	kW
Frequency pulling factor (v.s.w.r. = 1.5)	—		15	Mc/s
Frequence pushing factor	—		750	kc/s per A
Frequency temperature coefficient	—		–250	kc/s per °C
Distance of v.s.w. minimum from face of mounting plate into valve	10.8	to	17.8	mm
Input capacitance	—		12	pF

TYPICAL OPERATION

Duty cycle	0.0002	0.001	0.001	
Heater voltage (running)	10	7.5	7.5	V
Pulse duration	0.1	1.0	5.0	μs
Pulse repetition frequency	2000	1000	200	p/s
Pulse current	15	15	15	A
Pulse voltage	15	15	15	kV
Pulse input power	225	225	225	kW
R.F. pulse output power	80	80	80	kW
*Mean input current	3.5	15	15	mA
Mean input power	45	225	225	W
Mean r.f. output power	16	80	80	W
Frequency pulling (v.s.w.r. = 1.5)	10	10	10	Mc/s
Rate of rise of pulse voltage	140	70	60	kV/μs

*Includes pre-oscillation current

CATHODE

Indirectly heated

V_h	10	V
I_h	2.85	A
$I_{h(surge)}$ max.	11.5	A
r_h (cold)	0.4	Ω

Heating time. At ambient temperatures above 0°C the cathode must be heated for at least 3 minutes before the application of h.t.

In many applications involving short pulse lengths and high pulse repetition frequencies the mean current which would be calculated from the duty cycle is increased by the pre-oscillation current.

For mean input powers greater than 50 watts, it is necessary to reduce the heater voltage immediately after the application of h.t. in accordance with the input power-heater voltage rating chart on page C2.

ABSOLUTE MAXIMUM RATINGS

	Min.	*Max.*	
Pulse current	11	17	A
Pulse duration	—	5.5	μs
Duty cycle	—	0.002	
Mean input power	—	400	W
Rate of rise of voltage pulse			
($t_p \leqq 1\mu s$)	—	150	kV/μs
($t_p > 1\mu s$)	—	80	kV/μs
Load mismatch (v.s.w.r.)	—	1.5	
Temperature of anode block	—	175	°C
Temperature of cathode and heater seals	—	150	°C

END OF LIFE PERFORMANCE

The valve is deemed to have reached end of life when it fails to satisfy the following:—

R.F. pulse power output (I_{pulse} = 15A)			60	kW
Frequency	Min		Max	
Within the band	9.345	to	9.405	Gc/s
Pulse voltage (I_{pulse} = 15A)	14	to	16	kV

MOUNTING POSITION

Any

PRESSURISING

The valve must not be operated at a pressure lower than 600mm of mercury. The waveguide output system can be pressurised upto a pressure of 2370mm of mercury.

PHYSICAL DATA

	lb	kg
Weight of magnetron	4.7	2.2
Weight of magnetron in carton	13	5.9
	in	cm
Dimensions of storage carton	13.25 x 12 x 9.375	33.7 x 30.5 x 23.8

COOLING

It is necessary to direct a flow of cooling air between the radiator fins, and on the cathode and heater seals, in order to keep the temperature below the permitted maximum.

CONVERSION TABLE
(rounded outwards)

4.0 min.	0.157 min.
6.0 min.	0.236 min.
6.0 ± 1.0	0.236 ± 0.040
7.15 ± 0.05	0.2815 ± 0.0020
8.2 ± 0.2	0.3228 ± 0.0079
11.95 ± 0.25	0.470 ± 0.010
21 ± 0.6	0.827 ± 0.024
24.5 ± 1.0	0.965 ± 0.040
31 ± 0.1	1.220 ± 0.004
32.5 ± 0.1	1.280 ± 0.004
64.3 ± 0.2	2.5315 ± 0.0079
67 max.	2.638 max.
70.6 ± 0.2	2.7795 ± 0.0079
80 max.	3.150 max.
83 max.	3.268 max.
90 max.	3.544 max.
152.7 max.	6.012 max.

OUTLINE DRAWING

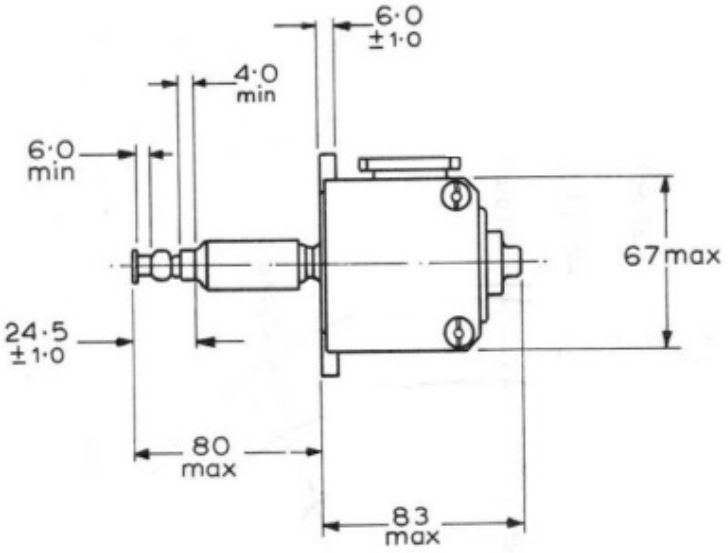

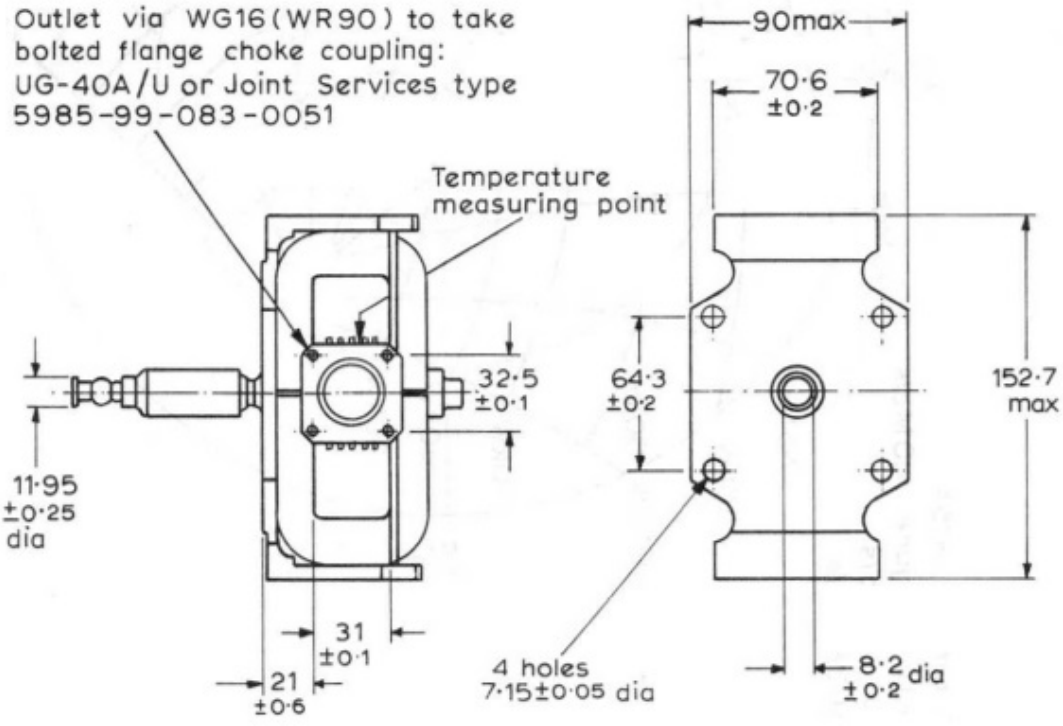

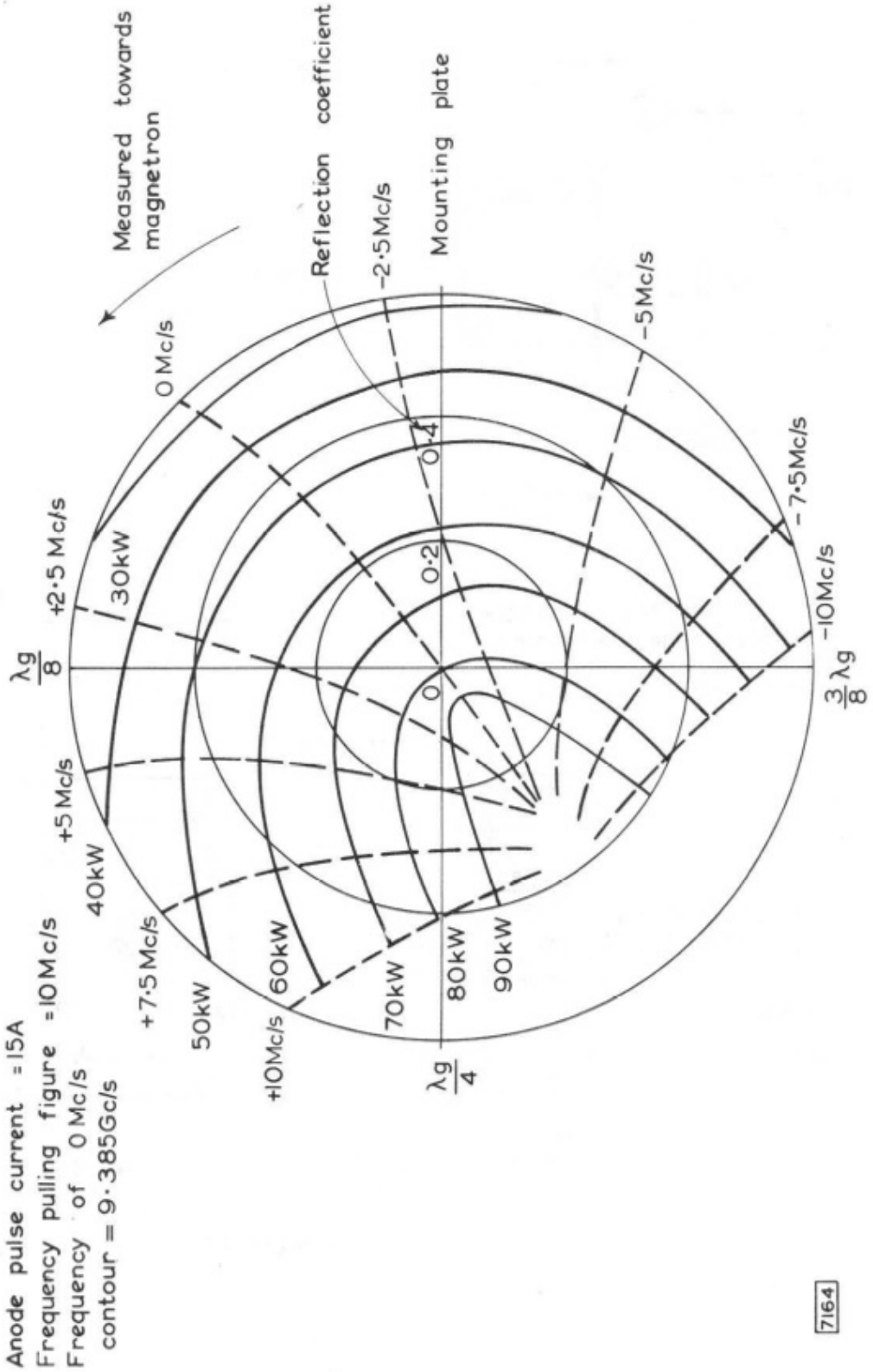

RIEKE DIAGRAM

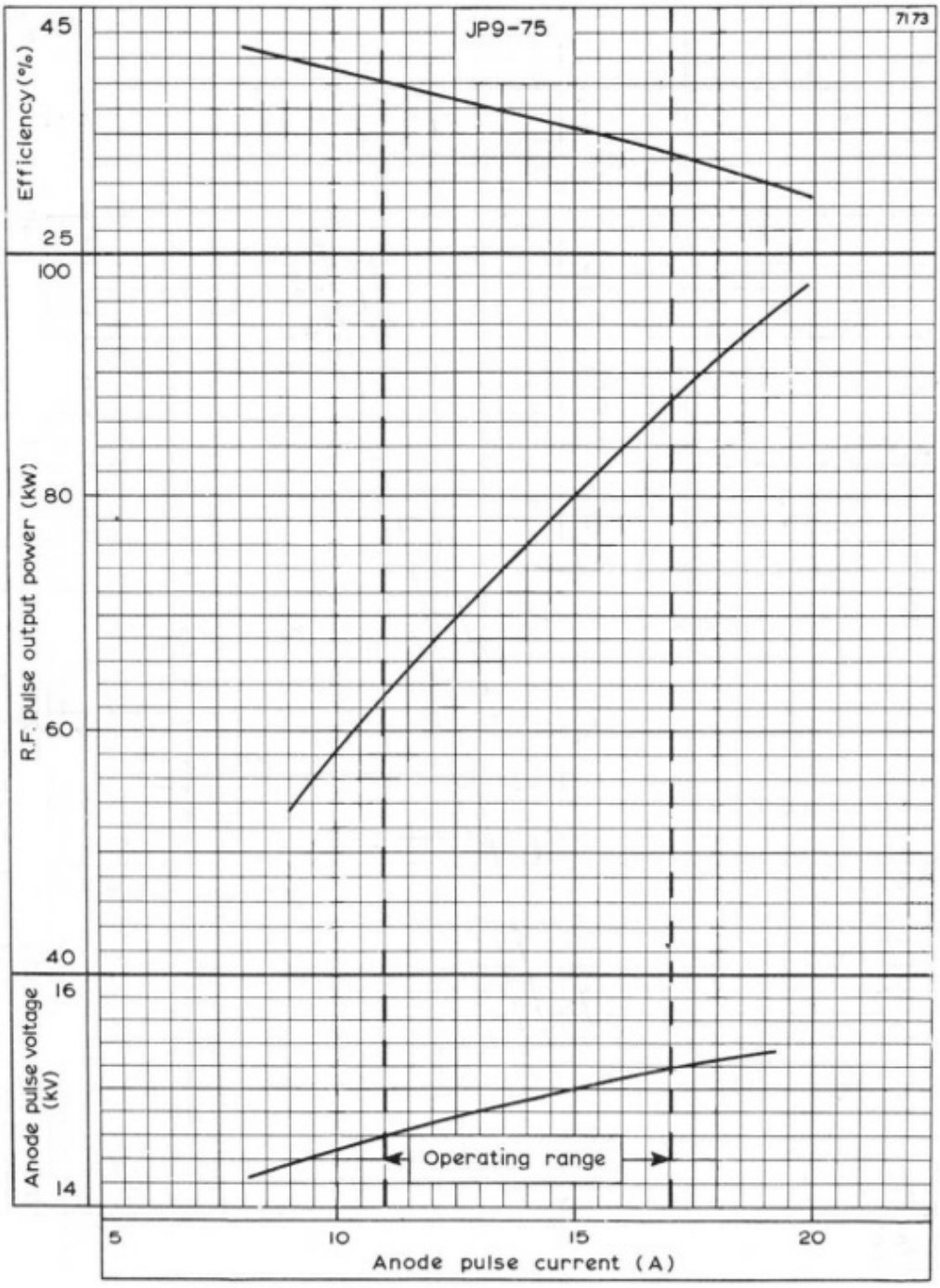

ANODE PULSE VOLTAGE, R.F. PULSE OUTPUT POWER AND EFFICIENCY PLOTTED AGAINST ANODE PULSE CURRENT

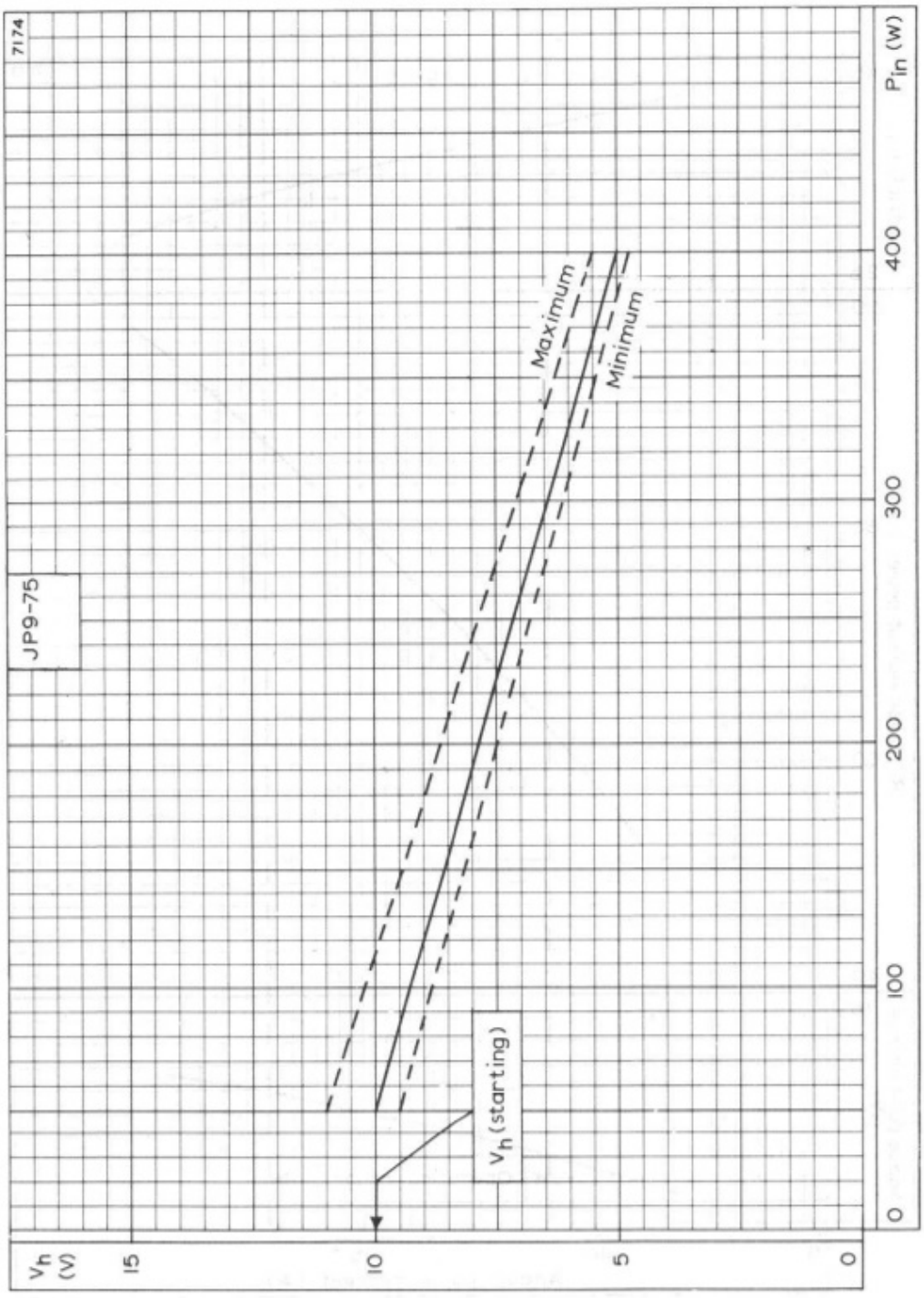

REDUCTION OF HEATER VOLTAGE PLOTTED AGAINST MEAN INPUT POWER