GEIGER-MÜLLER TUBE

Halogen quenched γ radiation counter tube fitted in a filter. The energy response is flat to within ±15% over the range 50 keV to 1.25 MeV referred to ^{137}Cs (661 keV).
The ZP1313 is an energy compensated version of the ZP1310.

QUICK REFERENCE DATA

Dose rate range	4×10^{-3} to 3×10^{3}	mGy/h
Energy range	40 to 3000	keV
Plateau threshold voltage	500	V
Plateau length	150	V
Recommended supply voltage	575	V
Chrome-iron cathode	80 to 100	mg/cm²

This data must be read in conjunction with General Information Geiger-Müller tubes.

MECHANICAL DATA

Dimensions in mm

Fig.1

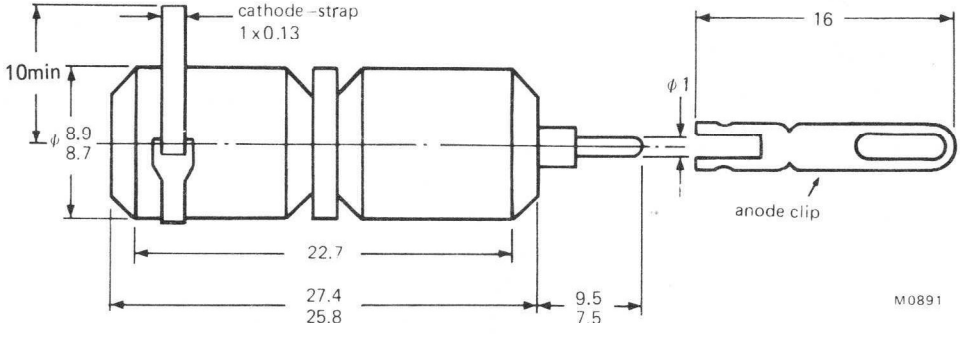

CATHODE (ZP1310)

Thickness	80 to 100	mg/cm²
Sensitive length	16	mm
Material	chrome-iron	

FILLING

helium, neon, halogen

CAPACITANCE

Anode to cathode	2.0	pF

OPERATING CHARACTERISTICS (Ambient temperature ≈ 25 °C)

Measured in circuit of Fig.2

Starting voltage	max.	380	V
Plateau threshold voltage	max.	500	V
Plateau length		150	V
Recommended supply voltage		575	V
Plateau slope	max.	0.15	%/V
Background shielded with 50 mm Pb with an inner liner of 3 mm Al), at recommended supply voltage	max.	2	count/min
Dead time, at recommended supply voltage	max.	15	μs

LIMITING VALUES (Absolute max, rating system)

Anode resistor	min.	2.2	MΩ
Anode voltage	max.	650	V
Ambient temperature			
continuous operating	max.	+70	°C
	min.	−40	°C
storage	max.	+75	°C

LIFE EXPECTANCY

Life expectancy at ≈ 25 °C	5×10^{10}	count

MEASURING CIRCUIT

R_1 = 2.2 MΩ

R_2 = 47 kΩ

C_1 = 1 pF

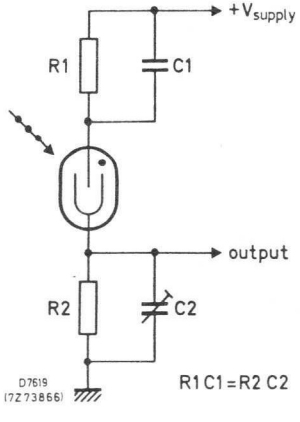

Fig.2

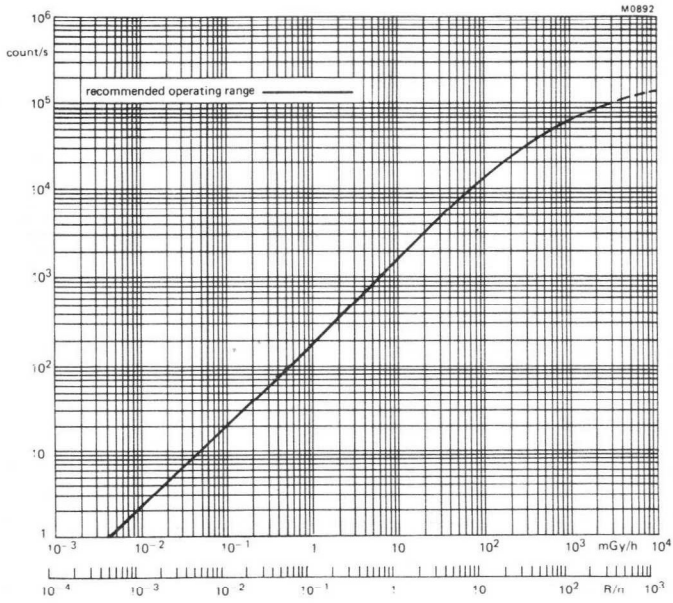

Typical counting rate as a function of dose rate (^{137}Cs)

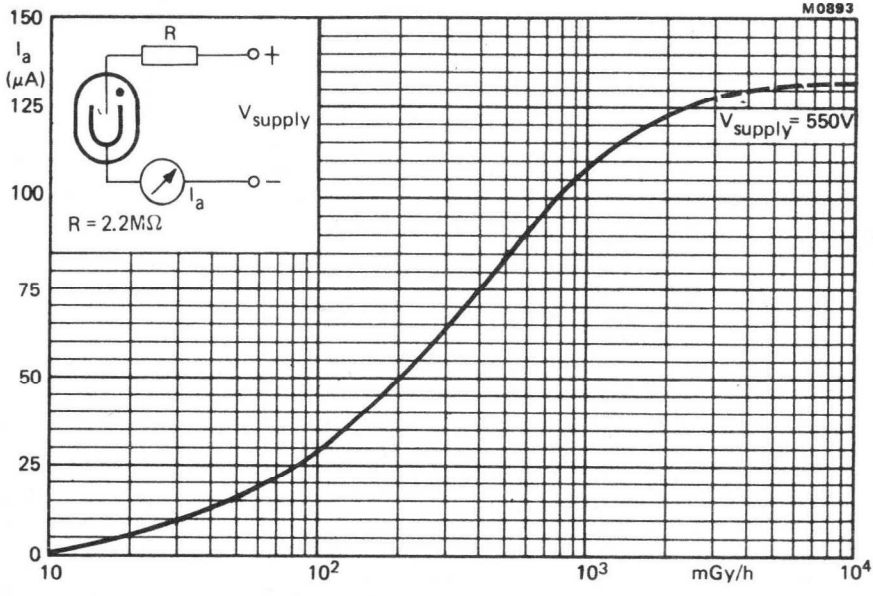

Typical current as a function of dose rate (^{137}Cs)

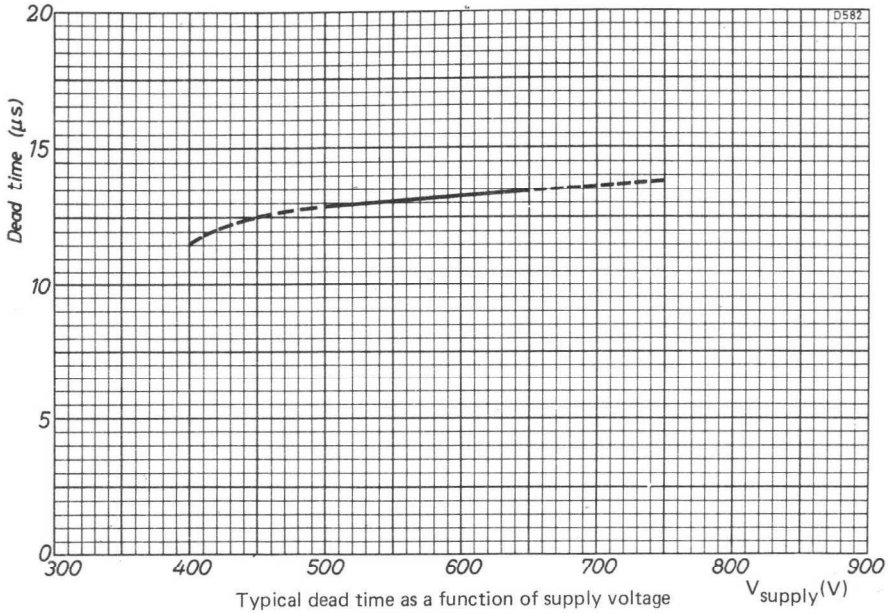

Typical dead time as a function of supply voltage

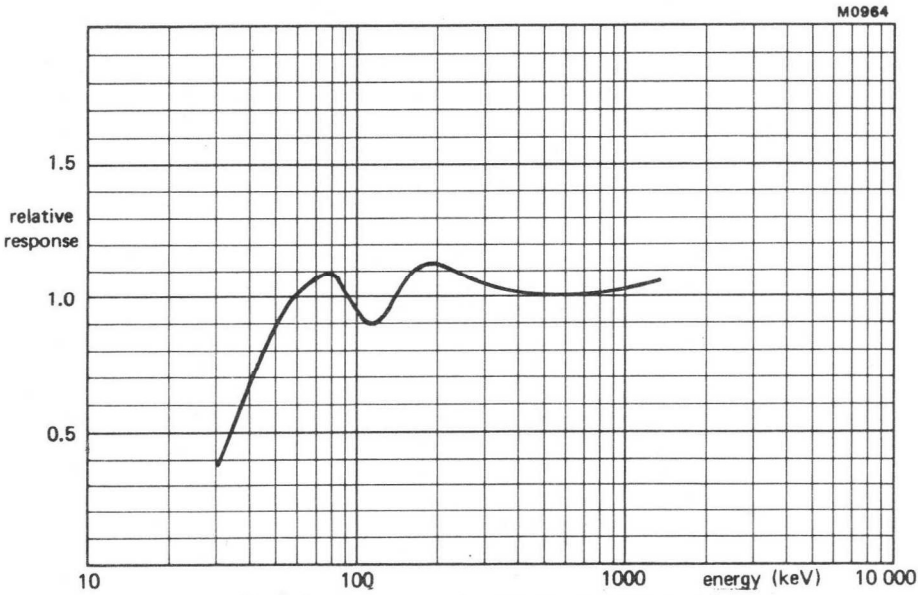

Typical energy response (side response) relative to ^{137}Cs

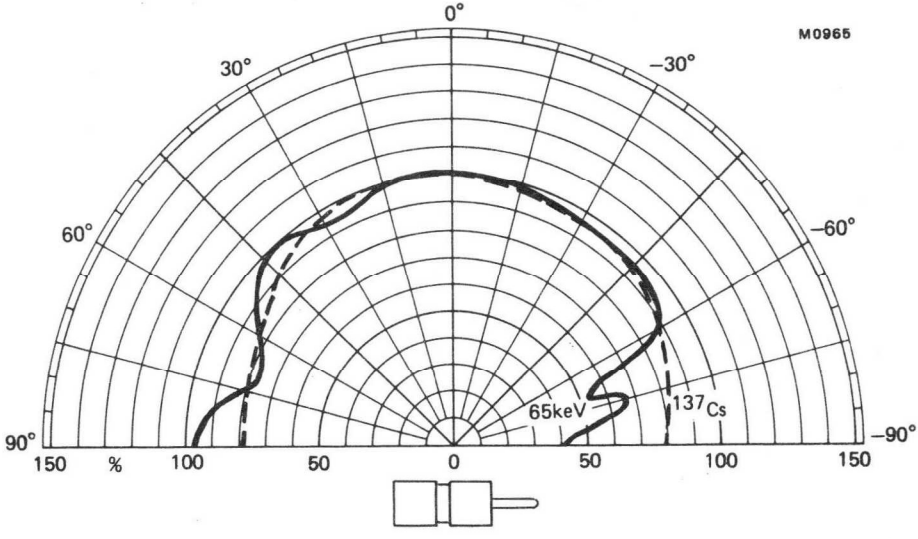

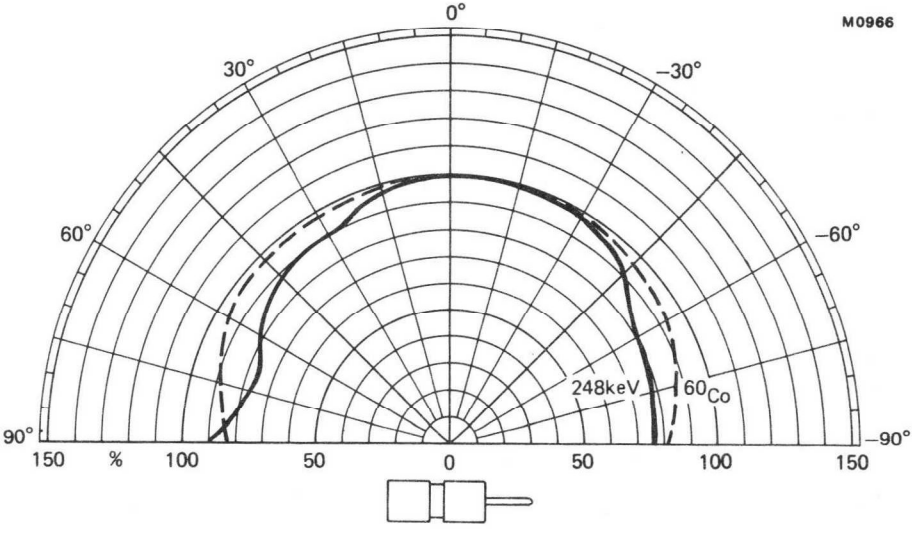

Typical polar responses